PCIe
M2 Key M+B

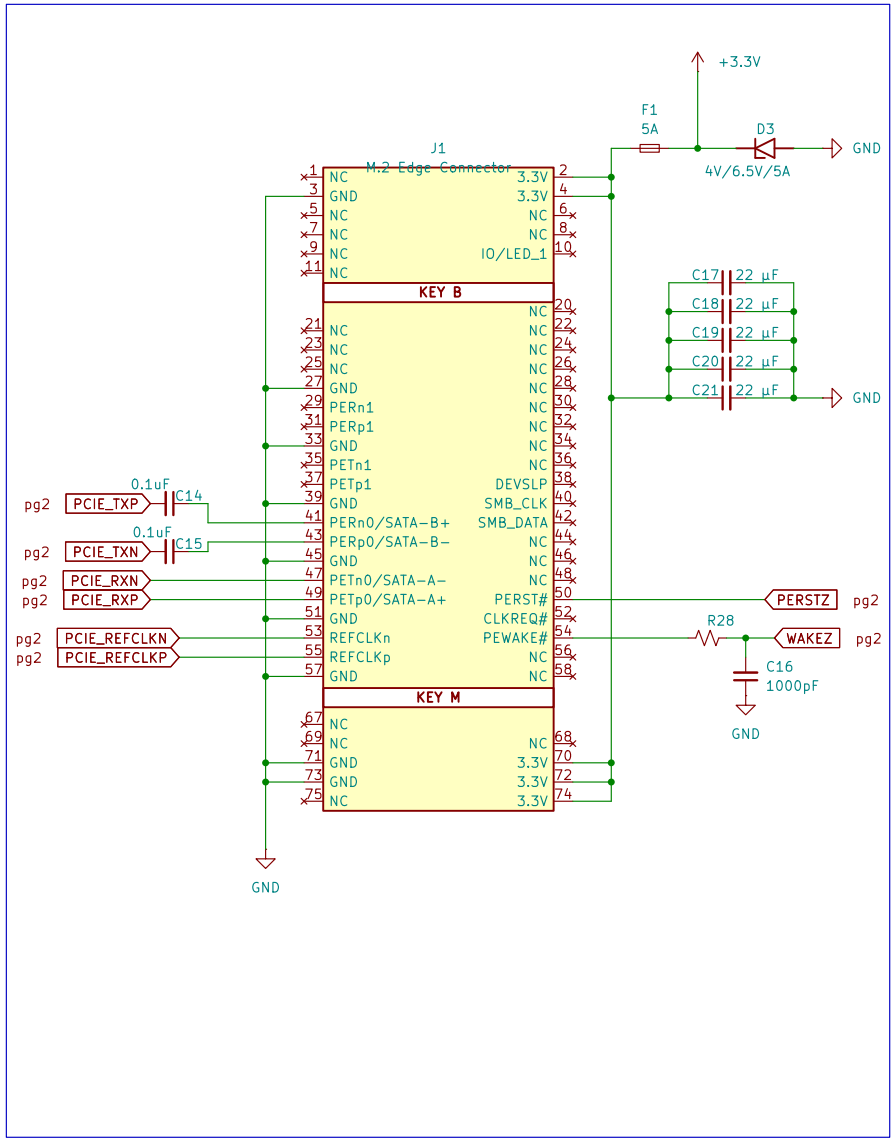

DOWNSTREAM
PORT1 / PORT2

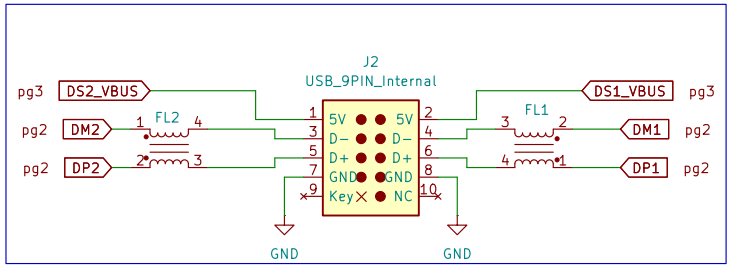

VIA AND TRACE REQUIREMENTS:

- MIN VIA PAD SIZE 20mils
- MIN spacing between trace and pad is 5mils
- MIN spacing between VIA and pad is 5mils
- MIN width of trace is 4mils

IMPEDANCE REQUIREMENTS:

- USB_DP/M must be 90-ohm differential (+/-15%)
- PCIE_TXP/N must be 100-ohms differential (+/-10%)
- PCIE_RXP/N must be 100-ohms differential (+/-10%)
- PCIE_REFCLKP/N must be 100-ohms differential (+/-10%)

LENGTH MATCHING REQUIREMENTS:

- USB_DP/M within 25mils
- PCIE_TXP/N within 5mils
- PCIE_RXP/N within 5mils
- PCIE_REFCLKP/N within 25mils

Initial Connectors
Based on:
https://wiki.congatec.com/wiki/M.2_Pinout_Descriptions_and_Reference_Designs_(AN43)
https://www.ti.com/lit/ug/sllu146d/sllu146d.pdf

3mdeb Sp. z o.o **Jakub Sobota**

Sheet: /
File: PCI2USB.kicad_sch

Title: PCI2USB

Size: A4	Date: 2026-03-27	**Rev: 1.1.0**
KiCad E.D.A. 9.0.8		Id: 1/4

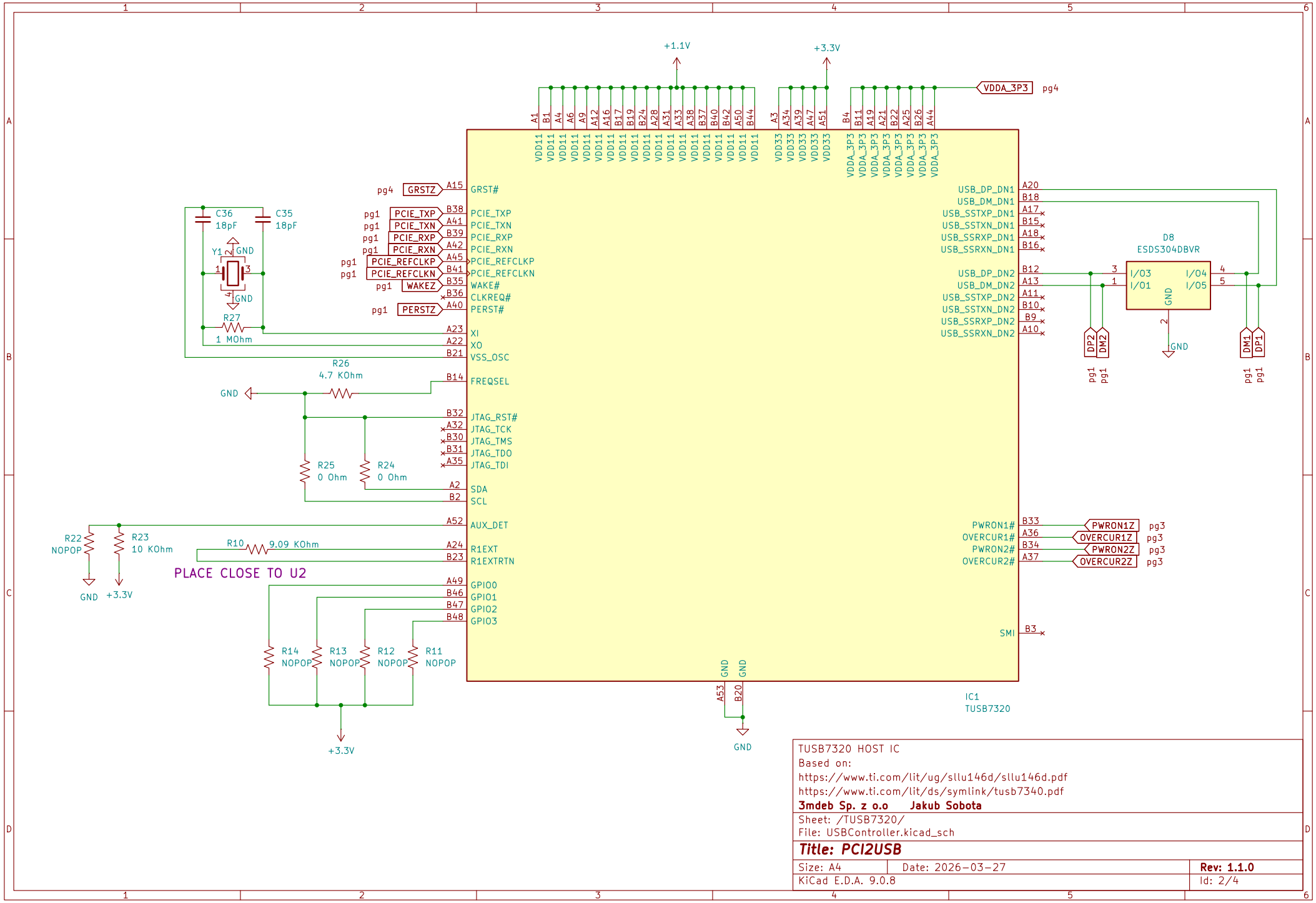

TUSB7320 HOST IC
Based on:
https://www.ti.com/lit/ug/sllu146d/sllu146d.pdf
https://www.ti.com/lit/ds/symlink/tusb7340.pdf

3mdeb Sp. z o.o **Jakub Sobota**

Sheet: /TUSB7320/
File: USBController.kicad_sch

Title: PCI2USB

Size: A4	Date: 2026-03-27	**Rev: 1.1.0**
KiCad E.D.A. 9.0.8		Id: 2/4

DOWNSTREAM POWER SWITCH

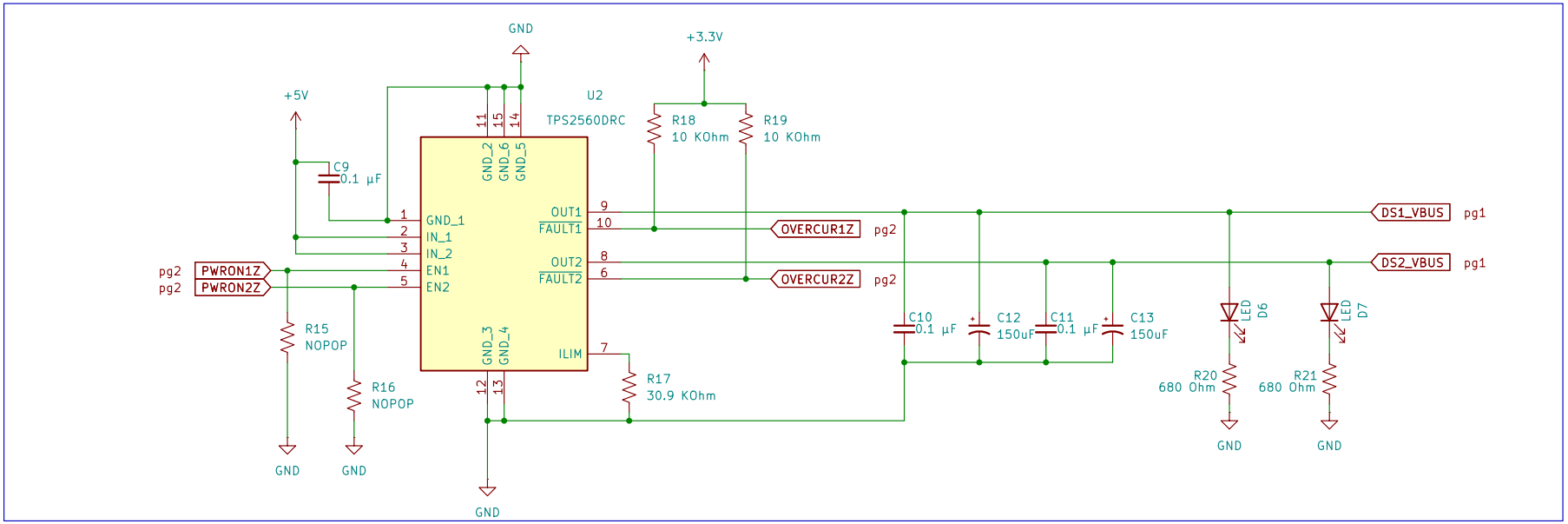

5V BOOST CONVERTER

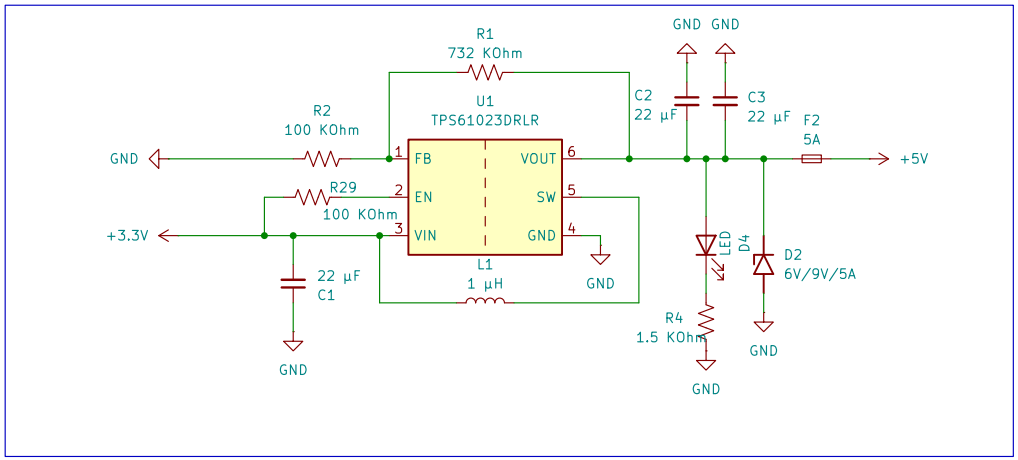

USB Power
Based on:
https://www.ti.com/lit/ug/sllu146d/sllu146d.pdf
https://www.ti.com/lit/ds/symlink/tps61023.pdf
3mdeb Sp. z o.o Jakub Sobota

Sheet: /USB Power/
File: USB Power.kicad_sch

Title: PCI2USB

Size: A4	Date: 2026-03-27	**Rev: 1.1.0**
KiCad E.D.A. 9.0.8		Id: 3/4

1.1V REGULATOR

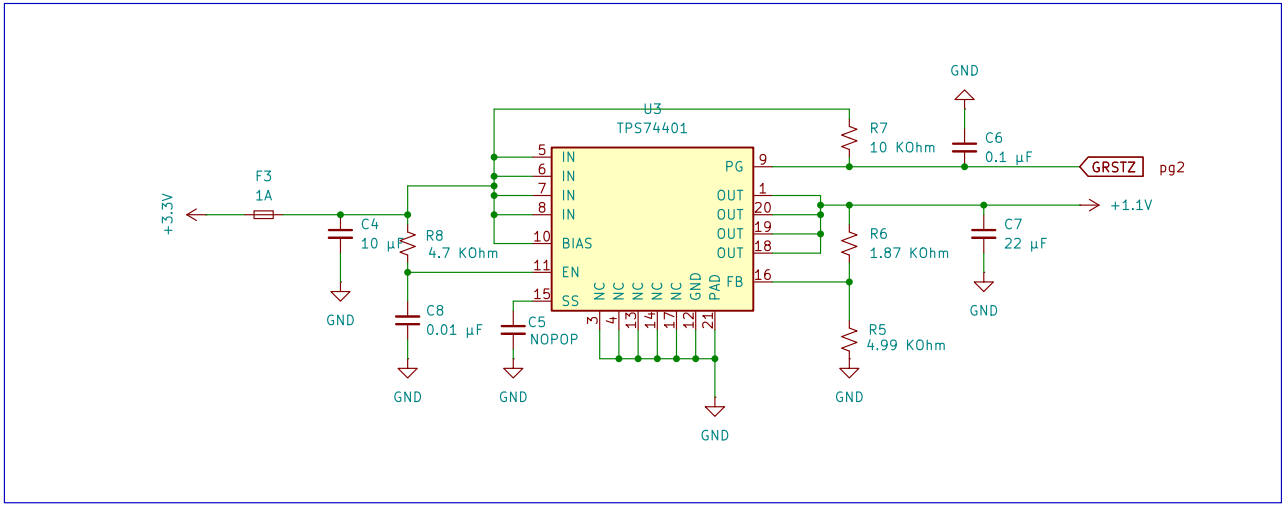

1.1V LINE CAPACITORS

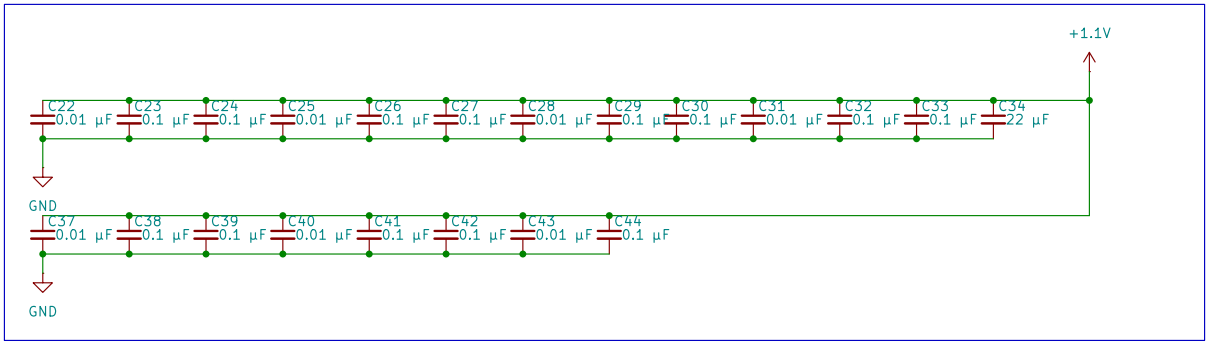

3.3V LINE CAPACITORS

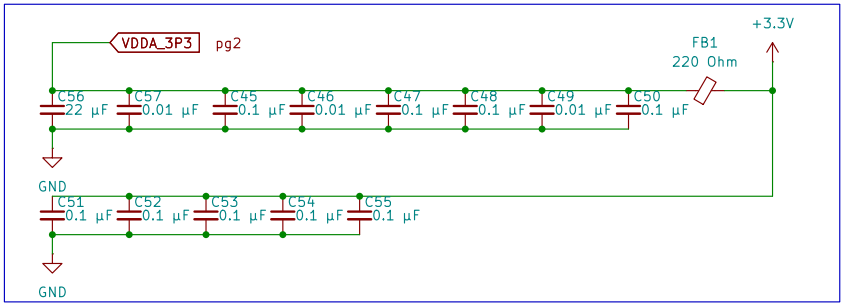

1.1V Regulator
Based on:
https://www.ti.com/lit/ug/sllu146d/sllu146d.pdf
https://www.ti.com/lit/ds/symlink/tps74401.pdf
3mdeb Sp. z o.o Jakub Sobota

Sheet: /TUSB7320 Power/
File: TUSB7320 Power.kicad_sch

Title: PCI2USB

Size: A4	Date: 2026-03-27	**Rev: 1.1.0**
KiCad E.D.A. 9.0.8		Id: 4/4